HR BA **Tehnički list**

YS084S-WH

LED downlight
GU10 X 1 | bijela

- Osvjetljenje u stambenim prostorima, hodnicima i predsobljima, poslovnim prostorima, dekorativni element...
- Moderan dizajn
- Žarulja nije uključena u pakiranje

@ 2024, Green Tech LTD. All rights reserved

Tehnički list

YS084S-WH

Osnovne informacije

• Model	YS084S-WH
• Okruženje	Unutarnja rasvjeta
• Boja artikla	Bijela
• Materijal	Aluminij + željezo
• Način montaže	Nadgradna montaža
• Neto težina	
• Kut svjetlosti	
• IP stupanj zaštite	IP20

Električne specifikacije

• Tip grla	GU10 x 1 (max 12 W)
• Napon	VAC 220 - 240 / 50 Hz

Informacije o pakiranju

• Dimenzije pakiranja	85 x 85 x 95 mm
• Bruto težina	
• Transportno pakiranje	50 komada

@ 2024, Green Tech LTD. All rights reserved

Dimenzije

- Dimenzije artikla 80 x 80 x 84 mm

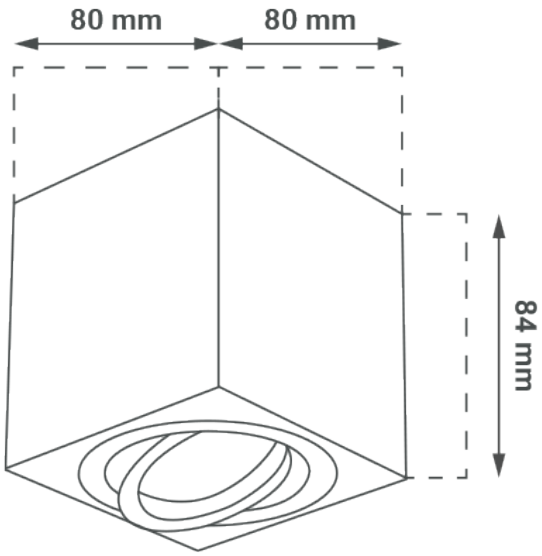

@ 2024, Green Tech LTD. All rights reserved

SI

Podatkovni list izdelka

YS084S-WH

LED downlight
GU10 X 1 | bela

- Razsvetljava v bivalnih prostorih, hodnikih in avlah, poslovnih prostorih, dekorativnih elementih...
- Sodobno oblikovanje
- Žarnica ni vključena v paket

@ 2024, Green Tech LTD. All rights reserved

Podatkovni list izdelka YS084S-WH

Osnovni podatki

• Model	YS084S-WH
• Okolje	Notranja razsvetljava
• Barva izdelka	Bela
• Material	Aluminij + železo
• Montaža	Površinska montaža
• Neto teža	
• Svetlobni kot	
• IP stopnja	IP20

Električne specifikacije

• Tip vtičnice žarnice	GU10 x 1 (max 12 W)
• Napetost	VAC 220 - 240 / 50 Hz

Informacije o embalaži

• Dimenzije paketa	85 x 85 x 95 mm
• Bruto teža	
• Transportna embalaža	50 kosov

@ 2024, Green Tech LTD. All rights reserved

Dimenzije

- Dimenzije izdelka 80 x 80 x 84 mm

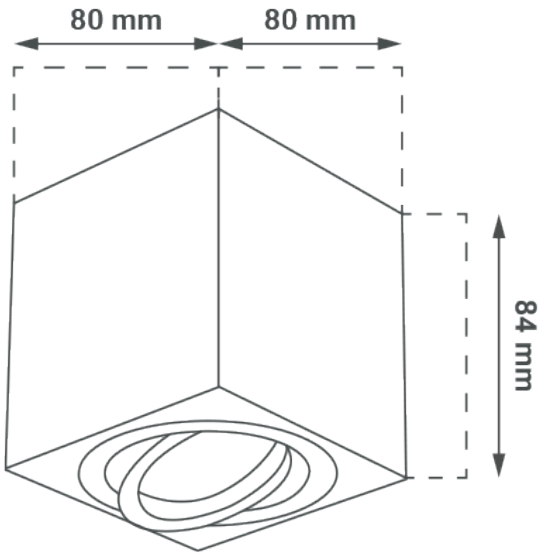

@ 2024, Green Tech LTD. All rights reserved

DE Produktdatenblatt

YS084S-WH

LED Downlight
GU10 X 1 | Weiß

- Beleuchtung in Wohnräumen, Fluren und Lobbys, Geschäftsräumen, dekorativen Elementen...
- Modernes Design
- Die Glühbirne ist nicht in der Verpackung enthalten

@ 2024, Green Tech LTD. All rights reserved

Produktdatenblatt

YS084S-WH

Allgemeine Informationen

• Modell	YS084S-WH
• Umgebung	Innenbeleuchtung
• Produktfarbe	Weiß
• Material	Aluminium + Eisen
• Montage	Oberflächenmontage
• Nettogewicht	
• Lichtwinkel	
• IP-Schutzart	IP20

Elektrische Spezifikationen

• Typ der Glühbirnenfassung	GU10 x 1 (max 12 W)
• Voltage	VAC 220 - 240 / 50 Hz

Verpackungsinformationen

• Abmessungen der Verpackung	85 x 85 x 95 mm
• Bruttogewicht	
• Abmessungen der Transportverpackung	50 Stück

@ 2024, Green Tech LTD. All rights reserved

Abmessungen

- Abmessungen des Produkts 80 x 80 x 84 mm

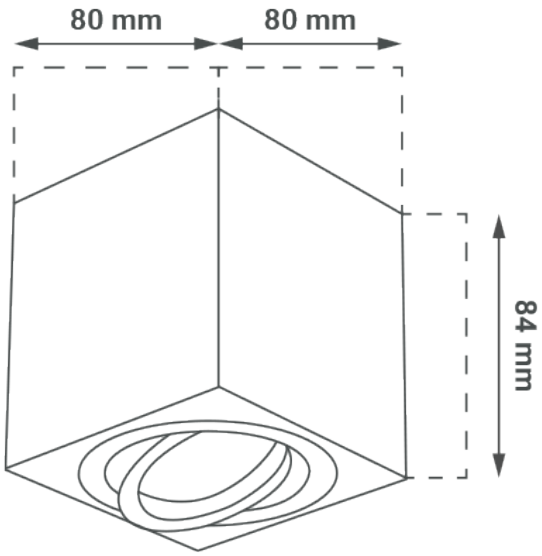

@ 2024, Green Tech LTD. All rights reserved

EN

Product datasheet

YS084S-WH

LED downlight
GU10 X 1 | white

- Lighting in living spaces, corridors and lobbies, business spaces, decorative element...
- Modern design
- The bulb is not included in the package

@ 2024, Green Tech LTD. All rights reserved

Product datasheet

YS084S-WH

General informations

• Model	YS084S-WH
• Environment	Indoor lighting
• Product color	White
• Material	Aluminum + iron
• Mounting	Surface mounting
• Weight	
• Beam angle	
• IP protection rate	IP20

Electrical specifications

• Bulb socket type	GU10 x 1 (max 12 W)
• Voltage	VAC 220 - 240 / 50 Hz

Packaging information

• Package dimensions	85 x 85 x 95 mm
• Gross weight	
• Transportation packaging	50 pieces

@ 2024, Green Tech LTD. All rights reserved

Dimensions

- Product dimensions 80 x 80 x 84 mm

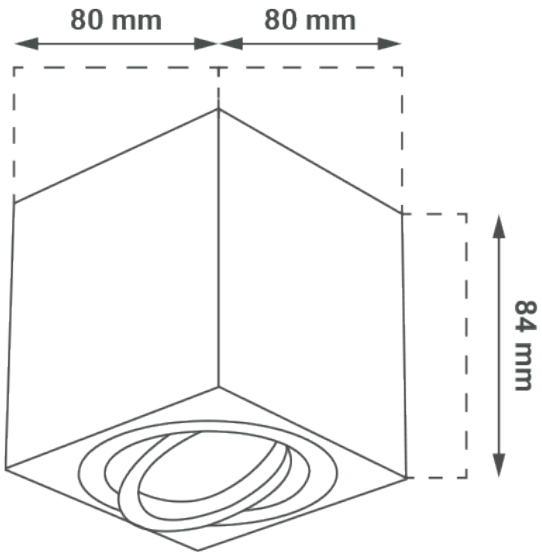

@ 2024, Green Tech LTD. All rights reserved