HR BA **Tehnički list**

PREMIUM50

LED reflektor
50 W | 4200 K | 7500 lm

- Premium serija, 150 lm / W
- MEANWELL LED driver
- Mogućnost dimovanja za prilagodljivo osvjetljenje u raznim okruženjima

@ 2024, Green Tech LTD. All rights reserved

Tehnički list

PREMIUM50

Osnovne informacije

• Model	PREMIUM50
• LED diode	San`an
• Boja artikla	Siva
• IP stupanj zaštite	IP66
• IK stupanj zaštite	Siva
• Materijal	Aluminij + staklo

Električne specifikacije

• Snaga	50 W
• Napon	AC 100 - 277 V / 50 - 60 Hz
• Dimabilnost	3 u 1 (0 - 10V, 10V, PWM)
• Radna temperatura:	-30 °C do 45 °C

@ 2024, Green Tech LTD. All rights reserved

Tehnički list

PREMIUM50

Osvjetljenje

• FLUX	7500 lm
• Svjetlosna učinkovitost	150 lm / W
• Boja svjetlosti	Neutralna / dnevna
• CCT	4200 K
• Indeks prikaza boja (CRI)	70
• Kut svjetlosti	120°
• Radni vijek	50 000 radnih sati
• PF	0.95

Logističke informacije

• Neto težina	
• Bruto težina	
• Dimenzije pakiranja	235 x 307 x 60 mm
• Transportno pakiranje	5 komada

@ 2024, Green Tech LTD. All rights reserved

Dimenzije

- Dimenzije artikla 220 x 52 x 283 mm

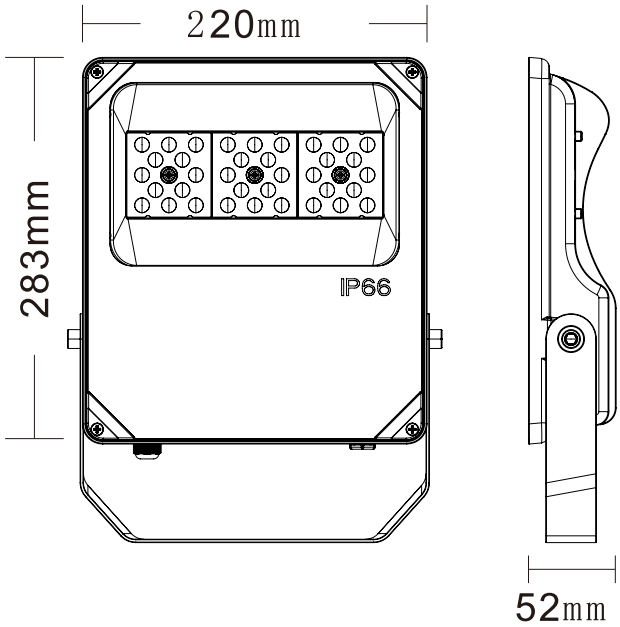

@ 2024, Green Tech LTD. All rights reserved

SR ME **Tehnički list**

PREMIUM50

LED reflektor
50 W | 4200 K | 7500 lm

- Premium serija, 150 lm / W
- MEANWELL LED driver
- Mogućnost zatamnjivanja za prilagodljivo osvetljenje u raznim okruženjima

@ 2024, Green Tech LTD. All rights reserved

Tehnički list

PREMIUM50

Osnovne informacije

• Model	PREMIUM50
• LED diode	San`an
• Boja artikla	Siva
• IP stepen zaštite	IP66
• IK stepen zaštite	Siva
• Materijal	Aluminijum + staklo

Električne specifikacije

• Snaga	50 W
• Napon	AC 100 - 277 V / 50 - 60 Hz
• Dimabilnost	3 u 1 (0 - 10V, 10V, PWM)
• Radna temperatura:	-30 °C do 45 °C

@ 2024, Green Tech LTD. All rights reserved

Tehnički list

PREMIUM50

Osvetljenje

• FLUX	7500 lm
• Svetlosna efikasnost	150 lm / W
• Boja svetlosti	Neutralna / dnevna
• CCT	4200 K
• Indeks prikaza boja (CRI)	70
• Ugao svetlosti	120°
• Radni vek	50 000 radnih sati
• PF	0.95

Logističke informacije

• Neto težina	6,150 kg
• Bruto težina	6,760 kg
• Dimenzije pakiranja	235 x 307 x 60 mm
• Transportno pakovanje	5 komada

@ 2024, Green Tech LTD. All rights reserved

Dimenzije

- Dimenzije artikla 220 x 52 x 283 mm

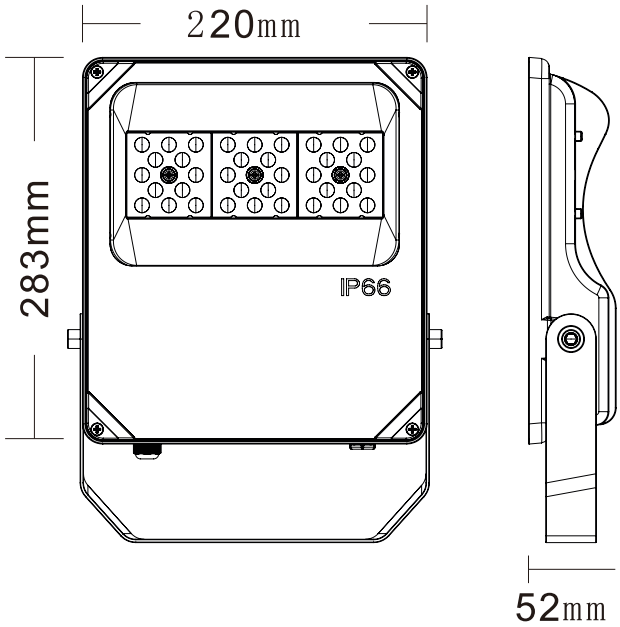

@ 2024, Green Tech LTD. All rights reserved

SI

Podatkovni list izdelka

PREMIUM50

LED reflektor
50 W | 4200 K | 7500 lm

- Serija Premium, 150 lm / W
- LED MEANWELL
- Funkcija zatemnitve za prilagodljivo osvetlitev v različnih okoljih

@ 2024, Green Tech LTD. All rights reserved

Podatkovni list izdelka

PREMIUM50

Osnovni podatki

• Model	PREMIUM50
• LED diode	San`an
• Barva izdelka	Siva
• IP stopnja	IP66
• IK stopnja	Siva
• Material	Aluminij + steklo
• Namestitev	Vgradnja v notranjost

Električne specifikacije

• Moč	50 W
• Napetost	AC 100 - 277 V / 50 - 60 Hz
• Zatemnitev	3 v 1 (0 - 10V, 10V, PWM)
• Delovna temperatura	-30 °C do 45 °C

@ 2024, Green Tech LTD. All rights reserved

Podatkovni list izdelka

PREMIUM50

Osvetlitev

• FLUX	7500 lm
• Svetlobna učinkovitost	150 lm / W
• Barva svetlobe	Nevtralna
• CCT	4200 K
• Indeks barvne reprodukcije (CRI)	70
• Svetlobni kot	120°
• Življenjska doba	50 000 delovnih ur
• PF	0.95

Logistični podatki

• Neto teža	6,150 kg
• Bruto teža	6,760 kg
• Dimenzije paketa	235 x 307 x 60 mm
• Transportna embalaža	5 kosov

@ 2024, Green Tech LTD. All rights reserved

Dimenzije

- Dimenzije izdelka 220 x 52 x 283 mm

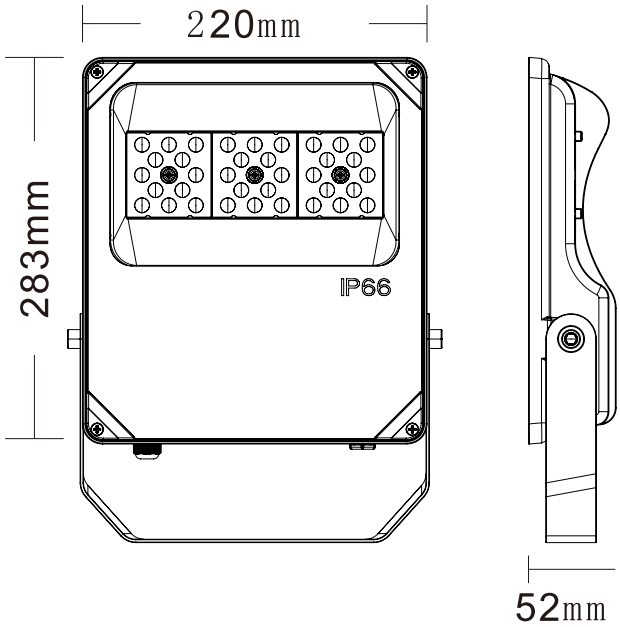

@ 2024, Green Tech LTD. All rights reserved

DE **Produktdatenblatt**

PREMIUM50

LED-Flutlicht
50 W | 4200 K | 7500 lm

- Premium-Serie, 150 lm / W
- MEANWELL LED-Treiber
- Dimmbare Funktionalität für einstellbare Beleuchtung in verschiedenen Umgebungen

@ 2024, Green Tech LTD. All rights reserved

Allgemeine Informationen

• Modell	PREMIUM50
• LED Diode	San`an
• Produktfarbe	Grau
• IP-Schutzart	IP66
• IK-Schutzrat	Grau
• Material	Aluminium + Glas
• Einbau	Versenkte Montage

Elektrische Spezifikationen

• Leistung	50 W
• Spannung	AC 100 - 277 V / 50 - 60 Hz
• Dimmbare Funktion	3 in 1 (0 - 10V, 10V, PWM)
• Arbeitstemperatur	-30 °C bis 45 °C

@ 2024, Green Tech LTD. All rights reserved

Beleuchtung

• FLUX	7500 lm
• Lichtausbeute	150 lm / W
• Helle Farbe	Neutral
• CCT	4200 K
• Farbwiedergabeindex (CRI)	70
• Lichtwinkel	120°
• Lebensdauer	50 000 Arbeitsstunden
• PF	0.95

Logistik-Informationen

• Nettogewicht	6,150 kg
• Bruttogewicht	6,760 kg
• Abmessungen der Verpackung	235 x 307 x 60 mm
• Abmessungen der Transportverpackung	5 Stück

@ 2024, Green Tech LTD. All rights reserved

Abmessungen

- Abmessungen des Produkts 220 x 52 x 283 mm

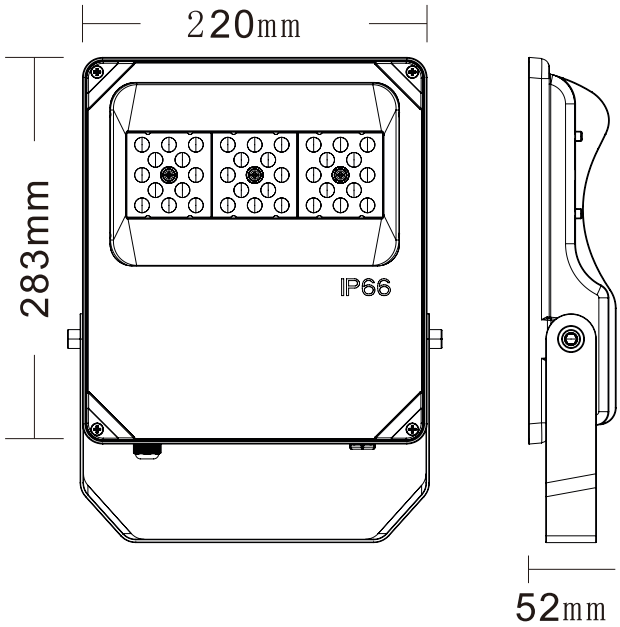

@ 2024, Green Tech LTD. All rights reserved

EN

Product datasheet

PREMIUM50

LED floodlight
50 W | 4200 K | 7500 lm

- Premium series, 150 lm / W
- MEANWELL LED driver
- Dimmable functionality for adjustable lighting in various environments

@ 2024, Green Tech LTD. All rights reserved

Product datasheet

PREMIUM50

General informations

• Model	PREMIUM50
• LED chip	San`an
• Product color	Grey
• IP protection rate	IP66
• IK protection rate	Grey
• Material	Aluminum + Glass
• Installation	Recessed mounting

Electrical specifications

• Power consumption	50 W
• Voltage	AC 100 - 277 V / 50 - 60 Hz
• Dimmable	3 in 1 (0 - 10V, 10V, PWM)
• Working temperature	-30 °C to 45 °C

@ 2024, Green Tech LTD. All rights reserved

Lightning

• FLUX	7500 lm
• Luminous efficiency	150 lm / W
• Color of the light	Neutral / daylight
• CCT	4200 K
• Color Render Index (CRI)	70
• Beam angle	120°
• Life span	50 000 working hours
• PF	0.95

Logistic information

• Net weight	6,150 kg
• Gross weight	6,760 kg
• Package dimensions	235 x 307 x 60 mm
• Transport package	5 pieces

@ 2024, Green Tech LTD. All rights reserved

Dimensions

- Product dimensions 220 x 52 x 283 mm

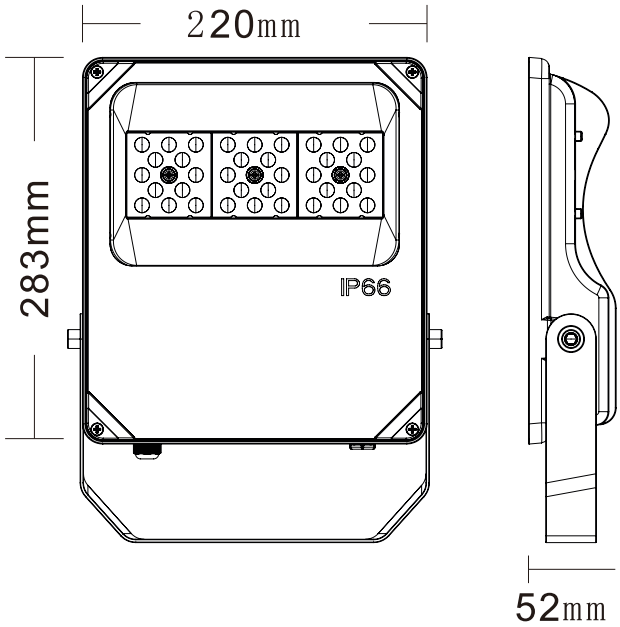

@ 2024, Green Tech LTD. All rights reserved