HR BA

# Tehnički list

## MG17-6W-3CCT

**LED magnetna svjetiljka za slim šinu**
6 W | 3000 K - 4000 K - 6500 K

- Fleksibilno postavljanje za svaki ambijent
- Mogućnost dimovanja
- DC 48 V

@ 2024, Green Tech LTD. All rights reserved

# Tehnički list

MG17-6W-3CCT

## Osnovne informacije

| | |
|---|---|
| • Model | MG17-6W-3CCT |
| • IP stupanj zaštite | IP20 |
| • Materijal | Aluminij + akrilni difuzor |
| • Montaža | Montaža na magnetnu šinu |
| • Radna temperatura | -40°C do 60°C |
| • LED diode | OSRAM |

## Električne specifikacije

| | |
|---|---|
| • Snaga | 6 W |
| • Napon | DC 48 V |
| • Struja | 150 mA |
| • Dimabilnost | DA |


@ 2024, Green Tech LTD. All rights reserved

# Tehnički list

MG17-6W-3CCT

## Osvjetljenje

| | |
|---|---|
| • FLUX | ≥ 510 lm |
| • Svjetlosna učinkovitost | ≥ 85 lm / W |
| • Boja svjetlosti | Toplo bijela - neutralna - hladno bijela |
| • CCT | 3000 K - 4000 K - 6500 K |
| • Indeks prikaza boja (CRI) | 80 |
| • Kut svjetlosti | 360° |
| • Radni vijek | 20 000 radnih sati |
| • PF | ≥ 0,5 |

## Logističke informacije

| | |
|---|---|
| • Neto težina | |
| • Bruto težina | |
| • Dimenzije pakiranja | |
| • Transportno pakiranje | 10 komada |


@ 2024, Green Tech LTD. All rights reserved

## Dimenzije

- Dimenzije artikla 150 x 150 mm

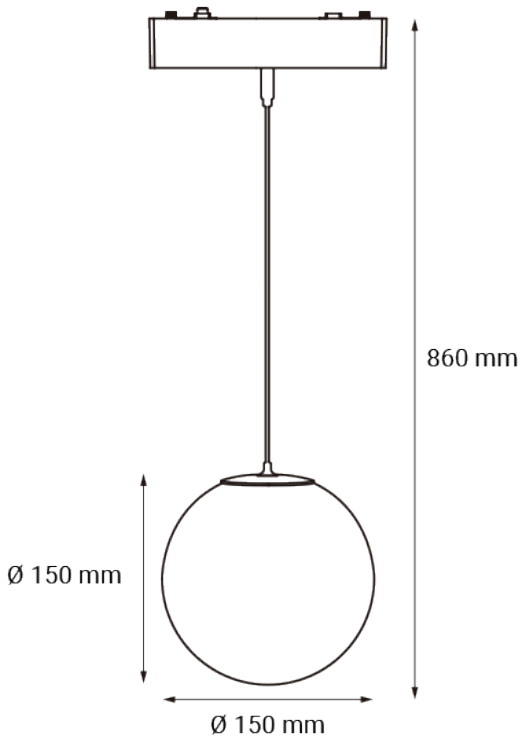



@ 2024, Green Tech LTD. All rights reserved

SI

# Podatkovni list izdelka

## MG17-6W-3CCT

**LED magnetna svetilka za tanko tirnico**
6 W | 3000 K - 4000 K - 6500 K

- Prilagodljiva namestitev za vsako okolje
- Možnost zatemnitve
- DC 48 V

@ 2024, Green Tech LTD. All rights reserved

# Podatkovni list izdelka MG17-6W-3CCT

## Osnovni podatki

| | |
|---|---|
| • Model | MG17-6W-3CCT |
| • IP stopnja | IP20 |
| • Material | Aluminij + akrilni difuzor |
| • Namestitev | Namestitev na magnetno stezo |
| • Delovna temperatura | -40 °C do 60 °C |
| • LED čip | OSRAM |

## Električne specifikacije

| | |
|---|---|
| • Moč | 6 W |
| • Napetost | DC 48 V |
| • Tok | 150 mA |
| • Zatemnitev | DA |


@ 2024, Green Tech LTD. All rights reserved

# Podatkovni list izdelka MG17-6W-3CCT

## Osvetlitev

| | |
|---|---|
| • FLUX | ≥ 510 lm |
| • Svetlobna učinkovitost | ≥ 85 lm / W |
| • Barva svetlobe | Topla bela - nevtralna - hladna bela |
| • CCT | 3000 K - 4000 K - 6500 K |
| • Indeks barvne reprodukcije (CRI) | 80 |
| • Svetlobni kot | 360° |
| • Življenjska doba | 20 000 delovnih ur |
| • PF | ≥ 0,5 |

## Logistični podatki

| | |
|---|---|
| • Neto teža | |
| • Bruto teža | |
| • Dimenzije paketa | |
| • Transportna embalaža | 10 kosov |


@ 2024, Green Tech LTD. All rights reserved

## Dimenzije

- Dimenzije izdelka 150 x 150 mm

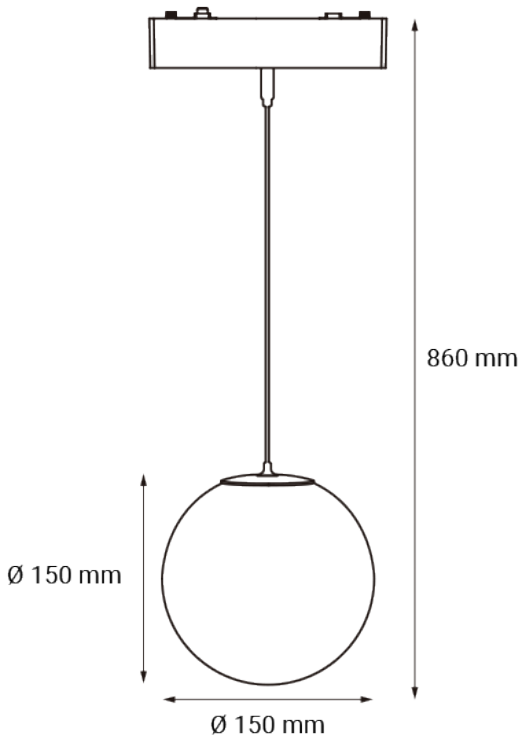



@ 2024, Green Tech LTD. All rights reserved

# DE Produktdatenblatt

## MG17-6W-3CCT

**LED-Magnetlampe für schlanke Schiene**
6 W | 3000 K - 4000 K - 6500 K

- Flexible Installation für jede Umgebung
- Dimmbar
- DC 48 V

@ 2024, Green Tech LTD. All rights reserved

# Produktdatenblatt

MG17-6W-3CCT

## Allgemeine Informationen

| | |
|---|---|
| • Modell | MG17-6W-3CCT |
| • IP-Schutzart | IP20 |
| • Material | Aluminium + Acryl-Diffuso |
| • Einbau | Installation auf einer Magnetschiene |
| • Arbeitstemperatur | -40°C bis zu 60°C |
| • LED-Chip | OSRAM |

## Elektrische Spezifikationen

| | |
|---|---|
| • Leistung | 6 W |
| • Spannung | DC 48 V |
| • Stromstärke | 150 mA |
| • Dimmbare Funktion | JA |


@ 2024, Green Tech LTD. All rights reserved

# Produktdatenblatt

MG17-6W-3CCT

## Beleuchtung

| | |
|---|---|
| • FLUX | ≥ 510 lm |
| • Lichtausbeute | ≥ 85 lm / W |
| • Helle Farbe | Warmweiß - Neutral - Kaltweiß |
| • CCT | 3000 K - 4000 K - 6500 K |
| • Farbwiedergabeindex (CRI) | 80 |
| • Lichtwinkel | 360° |
| • Lebensdauer | 20 000 Arbeitsstunden |
| • PF | ≥ 0,5 |

## Logistik-Informationen

| | |
|---|---|
| • Nettogewicht | |
| • Bruttogewicht | |
| • Abmessungen der Verpackung | |
| • Abmessungen der Transportverpackung | 10 Stück |


@ 2024, Green Tech LTD. All rights reserved

## Abmessungen

- Abmessungen des Produkts 150 x 150 mm

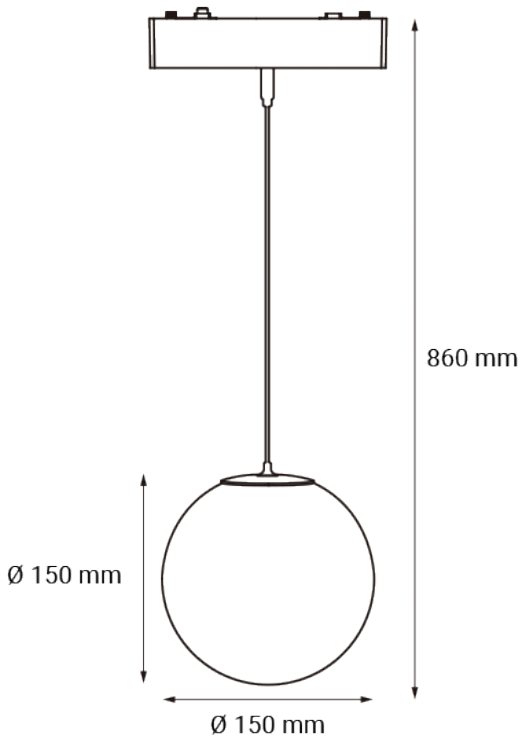



@ 2024, Green Tech LTD. All rights reserved

EN

# Product datasheet

## MG17-6W-3CCT

**LED magnetic light for slim track**
6 W | 3000 K - 4000 K - 6500 K

- Flexible installation for any environment
- Dimmable
- DC 48 V

@ 2024, Green Tech LTD. All rights reserved

# Product datasheet

MG17-6W-3CCT

## General informations

| | |
|---|---|
| • Model | MG17-6W-3CCT |
| • IP protection rate | IP20 |
| • Material | Aluminum + acrylic diffuser |
| • Installation | Installation on a magnetic track |
| • Working temperature | -40°C bis zu 60°C |
| • LED chip | OSRAM |

## Electrical specifications

| | |
|---|---|
| • Power consumption | 6 W |
| • Voltage | DC 48 V |
| • Current | 150 mA |
| • Dimmable | Yes |


@ 2024, Green Tech LTD. All rights reserved

# Product datasheet

MG17-6W-3CCT

## Lightning

| | |
|---|---|
| • FLUX | ≥ 510 lm |
| • Luminous efficiency | ≥ 85 lm / W |
| • Color of the light | Warm white - Neutral - Cold white |
| • CCT | 3000 K - 4000 K - 6500 K |
| • Color Render Index (CRI) | 80 |
| • Beam angle | 360° |
| • Life span | 20 000 working hours |
| • PF | ≥ 0,5 |

## Logistic information

| | |
|---|---|
| • Net weight | |
| • Gross weight | |
| • Package dimensions | |
| • Transport package | 10 pieces |


@ 2024, Green Tech LTD. All rights reserved

## Dimensions

- Product dimensions 150 x 150 mm

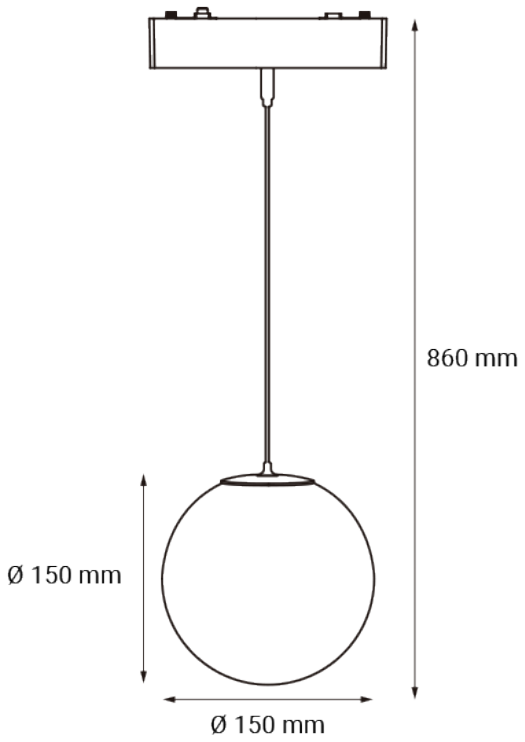



@ 2024, Green Tech LTD. All rights reserved