HR BA

Tehnički list

DW-S02-20W-3CCT

LED downlight
20 W | 3000 K - 4000 K - 6500 K

- Uređenje stambenih i poslovnih prostora
- Odabir boje svjetlosti pomoću prekidača

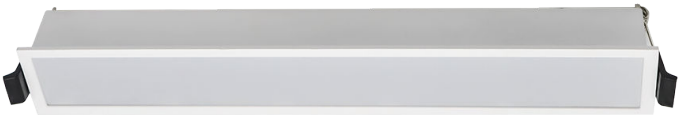

@ 2024, Green Tech LTD. All rights reserved

Tehnički list

DW-S02-20W-3CCT

Osnovne informacije

• Model	DW-S02-20W-3CCT
• LED diode	SMD 3030
• Boja artikla	Bijela
• IP stupanj zaštite	IP20
• Materijal	Aluminij + PS
• Montaža	Ugradna montaža

Električne specifikacije

• Snaga	20 W
• Napon	AC 85 - 265 V / 50 - 60 Hz
• Dimabilnost	Ne

@ 2024, Green Tech LTD. All rights reserved

Tehnički list

DW-S02-20W-3CCT

Osvjetljenje

• FLUX	1400 lm
• Svjetlosna učinkovitost	70 lm / W
• Boja svjetlosti	Toplo bijela - neutralna - hladno bijela
• CCT	3000 K - 4000 K - 6500 K
• Indeks prikaza boja (CRI)	≥ 80
• Kut svjetlosti	100°
• Radni vijek	30 000 radnih sati
• PF	≥ 0,5
• SCDM	≤ 7

Logističke informacije

• Neto težina	
• Bruto težina	
• Dimenzije pakiranja	70 x 55 x 300 mm
• Transportno pakiranje	20 komada

@ 2024, Green Tech LTD. All rights reserved

Dimenzije

• Dimenzije artikla	276 x 41 x 32 mm
• Dimenzije dijela za ugradnju	37 x 272 mm

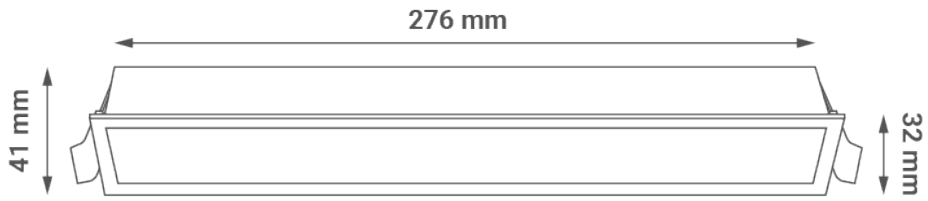

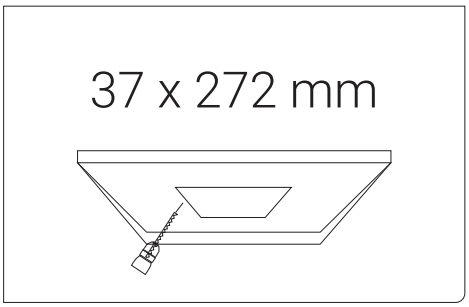

@ 2024, Green Tech LTD. All rights reserved

SI

Podatkovni list izdelka

DW-S02-20W-3CCT

LED svetilka
20 W | 3000 K - 4000 K - 6500 K

- Ureditev stanovanjskih in poslovnih prostorov
- Izbira barve svetlobe s stikalom

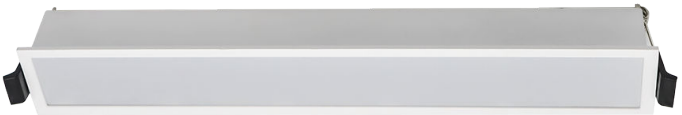

@ 2024, Green Tech LTD. All rights reserved

Podatkovni list izdelka DW-S02-20W-3CCT

Osnovni podatki

• Model	DW-S02-20W-3CCT
• LED diode	SMD 3030
• Barva izdelka	Bela
• IP stopnja	IP20
• Material	Aluminij + PS
• Namestitev	Vgradnja v notranjost

Električne specifikacije

• Moč	20 W
• Napetost	AC 85 - 265 V / 50 - 60 Hz
• Zatemnitev	Ne

@ 2024, Green Tech LTD. All rights reserved

Podatkovni list izdelka DW-S02-20W-3CCT

Osvetlitev

• FLUX	1400 lm
• Svetlobna učinkovitost	70 lm / W
• Barva svetlobe	Topla bela - nevtralna - hladna bela
• CCT	3000 K - 4000 K - 6500 K
• Indeks barvne reprodukcije (CRI)	≥ 80
• Svetlobni kot	100°
• Življenjska doba	30 000 delovnih ur
• PF	≥ 0,5
• SCDM	≤ 7

Logistični podatki

• Neto teža	
• Bruto teža	
• Dimenzije paketa	70 x 55 x 300 mm
• Transportna embalaža	20 kosov

@ 2024, Green Tech LTD. All rights reserved

Dimenzije

• Dimenzije izdelka	276 x 41 x 32 mm
• Dimenzije vgradnega dela	37 x 272 mm

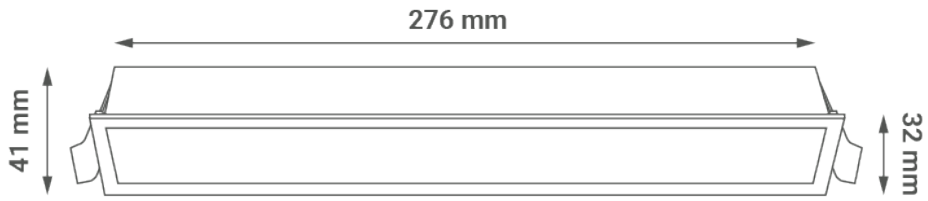

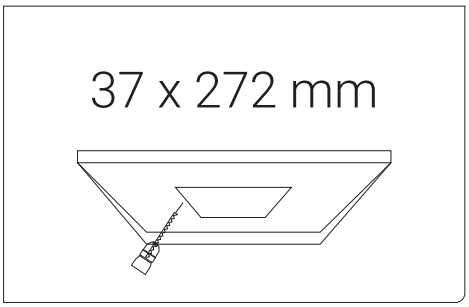

@ 2024, Green Tech LTD. All rights reserved

DE

Produktdatenblatt

DW-S02-20W-3CCT

LED-Downlight
20 W | 3000 K - 4000 K - 6500 K

- Gestaltung von Wohn- und Geschäftsräumen
- Auswählen der Lichtfarbe mit dem Schalter

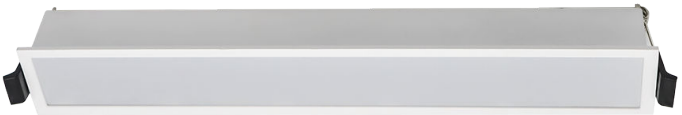

@ 2024, Green Tech LTD. All rights reserved

Produktdatenblatt DW-S02-20W-3CCT

Allgemeine Informationen

• Modell	DW-S02-20W-3CCT
• LED Diode	SMD 3030
• Produktfarbe	Weiß
• IP-Schutzart	IP20
• Material	Aluminium + PS
• Einbau	Versenkte Montage

Elektrische Spezifikationen

• Leistung	20 W
• Spannung	AC 85 - 265 V / 50 - 60 Hz
• Dimmbare Funktion	Nein

@ 2024, Green Tech LTD. All rights reserved

Produktdatenblatt DW-S02-20W-3CCT

Beleuchtung

• FLUX	1400 lm
• Lichtausbeute	70 lm / W
• Helle Farbe	Warmweiß - Neutral - Kaltweiß
• CCT	3000 K - 4000 K - 6500 K
• Farbwiedergabeindex (CRI)	≥ 80
• Lichtwinkel	100°
• Lebensdauer	30 000 Arbeitsstunden
• PF	≥ 0,5
• SCDM	≤ 7

Logistik-Informationen

• Nettogewicht	
• Bruttogewicht	
• Abmessungen der Verpackung	70 x 55 x 300 mm
• Abmessungen der Transportverpackung	20 Stück

@ 2024, Green Tech LTD. All rights reserved

Abmessungen

• Abmessungen des Produkts	276 x 41 x 32 mm
• Abmessungen der Einbauteile	37 x 272 mm

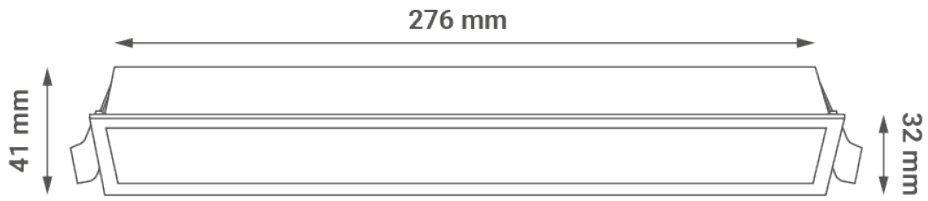

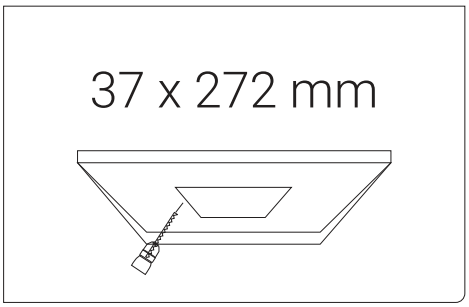

@ 2024, Green Tech LTD. All rights reserved

EN

Product datasheet

DW-S02-20W-3CCT

LED downlight
20 W | 3000 K - 4000 K - 6500 K

- Arrangement of residential and commercial spaces
- Selecting Light Color Using Switch

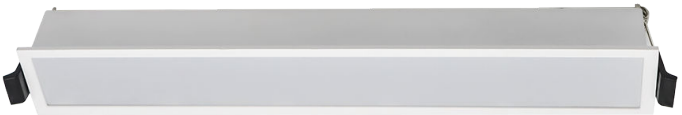

@ 2024, Green Tech LTD. All rights reserved

Product datasheet

DW-S02-20W-3CC

General informations

• Model	DW-S02-20W-3CCT
• LED chip	SMD 3030
• Product color	White
• IP protection rate	IP20
• Material	Aluminum + PS
• Installation	Recessed mounting

Electrical specifications

• Power consumption	20 W
• Voltage	AC 85 - 265 V / 50 - 60 Hz
• Dimmable	No

@ 2024, Green Tech LTD. All rights reserved

Product datasheet DW-S02-20W-3CCT

Lightning

• FLUX	1400 lm
• Luminous efficiency	70 lm / W
• Color of the light	Warm white - Neutral - Cold white
• CCT	3000 K - 4000 K - 6500 K
• Color Render Index (CRI)	≥ 80
• Beam angle	100°
• Life span	30 000 working hours
• PF	≥ 0,5
• SCDM	≤ 7

Logistic information

• Net weight	
• Gross weight	
• Package dimensions	70 x 55 x 300 mm
• Transport package	20 pieces

@ 2024, Green Tech LTD. All rights reserved

Dimensions

• Product dimensions	276 x 41 x 32 mm
• Installation part dimensions	37 x 272 mm

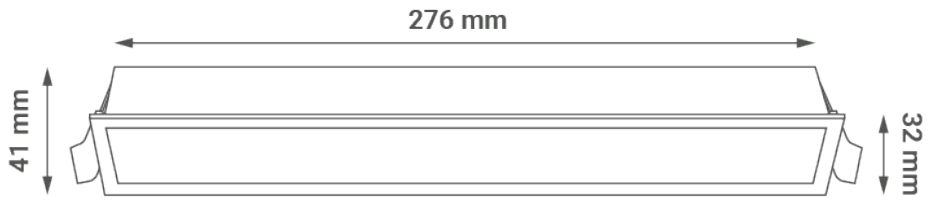

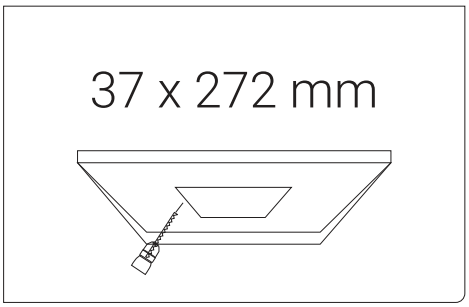

@ 2024, Green Tech LTD. All rights reserved