HR BA

Tehnički list

CX-S02-12-3CCT

LED panel
12 W | 3000 K - 4000 K - 6500 K

- Uređenje stambenih i poslovnih prostora
- Odabir boje svjetlosti pomoću prekidača

@ 2024, Green Tech LTD. All rights reserved

Tehnički list

CX-S02-12-3CCT

Osnovne informacije

• Model	CX-S02-12-3CCT
• LED diode	EPISTAR
• Okruženje	Unutarnja rasvjeta
• Boja artikla	Bijela
• IP stupanj zaštite	IP20
• Materijal	Aluminij

Električne specifikacije

• Snaga	12 W
• Napon	AC 85 - 240 V / 50 - 60 Hz
• Dimabilnost	Ne
• Mogućnost zamjene LED dioda	Ne
• Mogućnost zamjene LED driver-a	Da

@ 2024, Green Tech LTD. All rights reserved

Tehnički list

CX-S02-12-3CCT

Osvjetljenje

• FLUX	960 lm
• Svjetlosna učinkovitost	80 lm / W
• Boja svjetlosti	Toplo bijela - neutralna - hladno bijela
• CCT	3000 K - 4000 K - 6500 K
• Indeks prikaza boja (CRI)	80
• Kut svjetlosti	120°
• P.F.	0,5
• Radni vijek	30 000 radnih sati

Logističke informacije

• Neto težina	
• Bruto težina	
• Dimenzije pakiranja	175 x 50 x 165 mm
• Transportno pakiranje	20 komada

@ 2024, Green Tech LTD. All rights reserved

Dimenzije

- Dimenzije artikla 160 x 160 x 40 mm

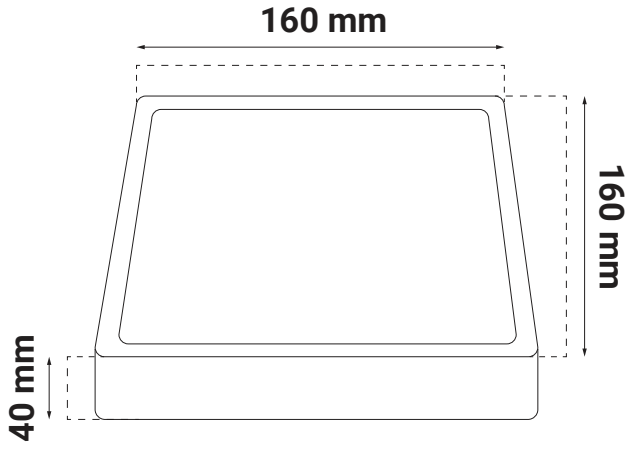

@ 2024, Green Tech LTD. All rights reserved

SI

Podatkovni list izdelka

CX-S02-12-3CCT

LED plošča
12 W | 3000 K - 4000 K - 6500 K

- Ureditev stanovanjskih in poslovnih prostorov
- Izbira barve svetlobe s stikalom

@ 2024, Green Tech LTD. All rights reserved

Podatkovni list izdelka CX-S02-12-3CCT

Osnovni podatki

• Model	CX-S02-12-3CCT
• LED diode	EPISTAR
• Okolje	Notranja razsvetljava
• Barva izdelka	Bela
• IP stopnja	IP20
• Material	Aluminij

Električne specifikacije

• Moč	12 W
• Napetost	AC 85 - 240 V / 50 - 60 Hz
• Zatemnitev	Ne
• Možnost zamenjave LED diod	Ne
• Možnost zamenjave LED driver-a	Da

@ 2024, Green Tech LTD. All rights reserved

Podatkovni list izdelka

CX-S02-12-3CCT

Osvetlitev

• FLUX	960 lm
• Svetlobna učinkovitost	80 lm / W
• Barva svetlobe	Topla bela - nevtralna - hladna bela
• CCT	3000 K - 4000 K - 6500 K
• Indeks barvne reprodukcije (CRI)	80
• P.F.	0,5
• Svetlobni kot	120°
• Življenjska doba	30 000 delovnih ur

Logistični podatki

• Neto teža	
• Bruto teža	
• Dimenzije paketa	175 x 50 x 165 mm
• Transportna embalaža	20 kosov

@ 2024, Green Tech LTD. All rights reserved

Dimenzije

- Dimenzije izdelka 160 x 160 x 40 mm

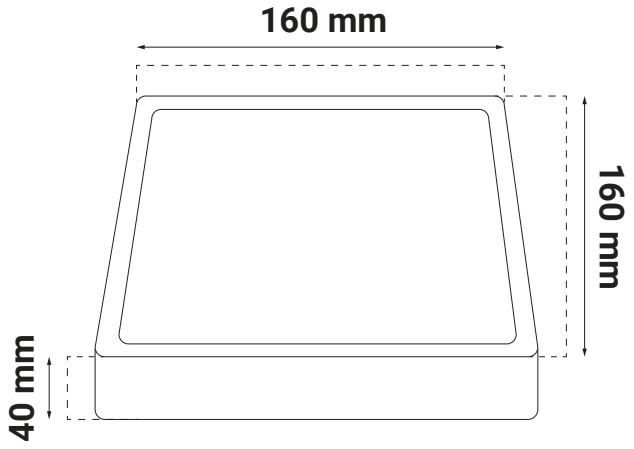

@ 2024, Green Tech LTD. All rights reserved

DE Produktdatenblatt

CX-S02-12-3CCT

LED-Panel
12 W | 3000 K - 4000 K - 6500 K

- Gestaltung von Wohn- und Geschäftsräumen
- Auswählen der Lichtfarbe mit dem Schalter

@ 2024, Green Tech LTD. All rights reserved

Produktdatenblatt

CX-S02-12-3CCT

Allgemeine Informationen

• Modell	CX-S02-12-3CCT
• LED Diode	EPISTAR
• Umgebung	Innenbeleuchtung
• Produktfarbe	Weiß
• IP-Schutzart	IP20
• Material	Aluminium

Elektrische Spezifikationen

• Leistung	12 W
• Spannung	AC 85 - 240 V / 50 - 60 Hz
• Dimmbare Funktion	Nein
• LED auswechseln	Nein
• LED Driver auswechseln	Ja

@ 2024, Green Tech LTD. All rights reserved

Produktdatenblatt

CX-S02-12-3CCT

Beleuchtung

• FLUX	960 lm
• Lichtausbeute	80 lm / W
• Helle Farbe	Warmweiß - Neutral - Kaltweiß
• CCT	3000 K - 4000 K - 6500 K
• Farbwiedergabeindex (CRI)	80
• P.F.	0,5
• Lichtwinkel	120°
• Lebensdauer	30 000 Arbeitsstunden

Logistik-Informationen

• Nettogewicht	
• Bruttogewicht	
• Abmessungen der Verpackung	175 x 50 x 165 mm
• Abmessungen der Transportverpackung	20 Stück

@ 2024, Green Tech LTD. All rights reserved

Abmessungen

- Abmessungen des Produkts 160 x 160 x 40 mm

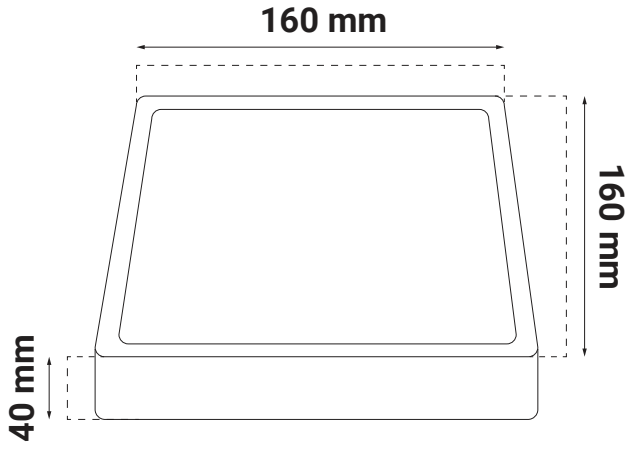

@ 2024, Green Tech LTD. All rights reserved

EN

Product datasheet

CX-S02-12-3CCT

LED panel
12 W | 3000 K - 4000 K - 6500 K

- Arrangement of residential and commercial spaces
- Selecting Light Color Using Switch

@ 2024, Green Tech LTD. All rights reserved

Product datasheet

CX-S02-12-3CCT

General informations

• Model	CX-S02-12-3CCT
• LED chip	EPISTAR
• Environment	Indoor lighting
• Product color	White
• IP protection rate	IP20
• Material	Aluminum

Electrical specifications

• Power consumption	12 W
• Voltage	AC 85 - 240 V / 50 - 60 Hz
• Dimmable	No
• Replacing LED	No
• Replacing power supply	Yes

@ 2024, Green Tech LTD. All rights reserved

Product datasheet

CX-S02-12-3CCT

Lightning

• FLUX	960 lm
• Luminous efficiency	80 lm / W
• Color of the light	Warm white - Neutral - Cold white
• CCT	3000 K - 4000 K - 6500 K
• Color Render Index (CRI)	80
• Beam angle	120°
• P.F.	0,5
• Life span	30 000 working hours

Logistic information

• Net weight	
• Gross weight	
• Package dimensions	175 x 50 x 165 mm
• Transport package	20 pieces

@ 2024, Green Tech LTD. All rights reserved

Dimensions

- Product dimensions 160 x 160 x 40 mm

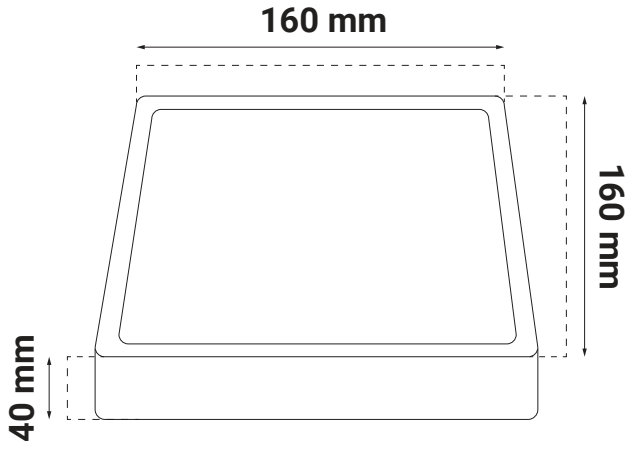

@ 2024, Green Tech LTD. All rights reserved